DESIGN PURCHASE CONSTRUCT ENJOY

OZCO Project #324 - 12x16 Column Cap Pergola with Lite Products

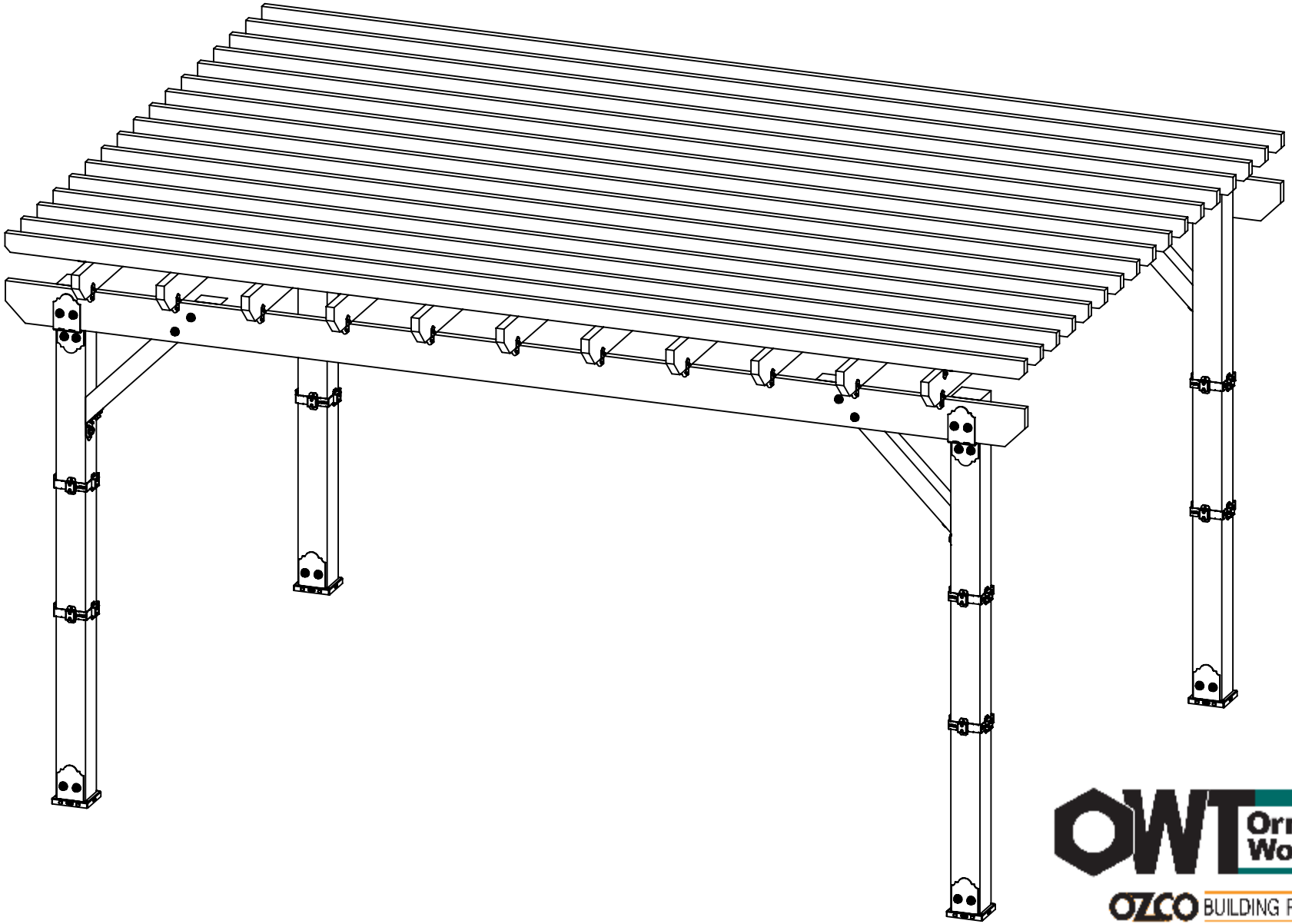

OWT Ornamental Wood Ties

OZCO BUILDING PRODUCTS

V2.00 - Installation Instructions, Specifications and Project Plans are effective 11/11/2017 . This information is updated periodically and should not be relied upon after 2 years from 11/11/2017 . Please visit OZCOBP.com to get current information.

One Page Process #: 4002

Printing Documents from ISSUU

Unfortunately, there is currently no way to print content directly through issuu. To print a publication, you will need to download it and print it from your computer.

One of Two Access Points for ISSUU

WEBSITE

DIRECT

You MUST create an account with Issuu or log in with Facebook or Google+

Below the publication is an icon click it

Below the publication is a word "Share" click it

Select the "Download" Option & Save the File to an easily accessed location.

"Open" the downloaded file, View and/or Print as you want.

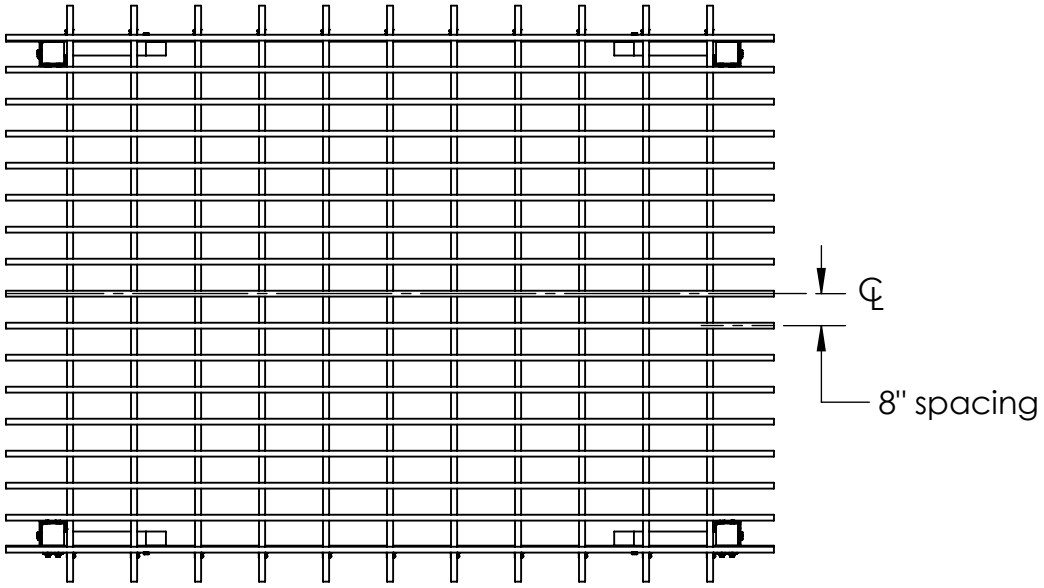

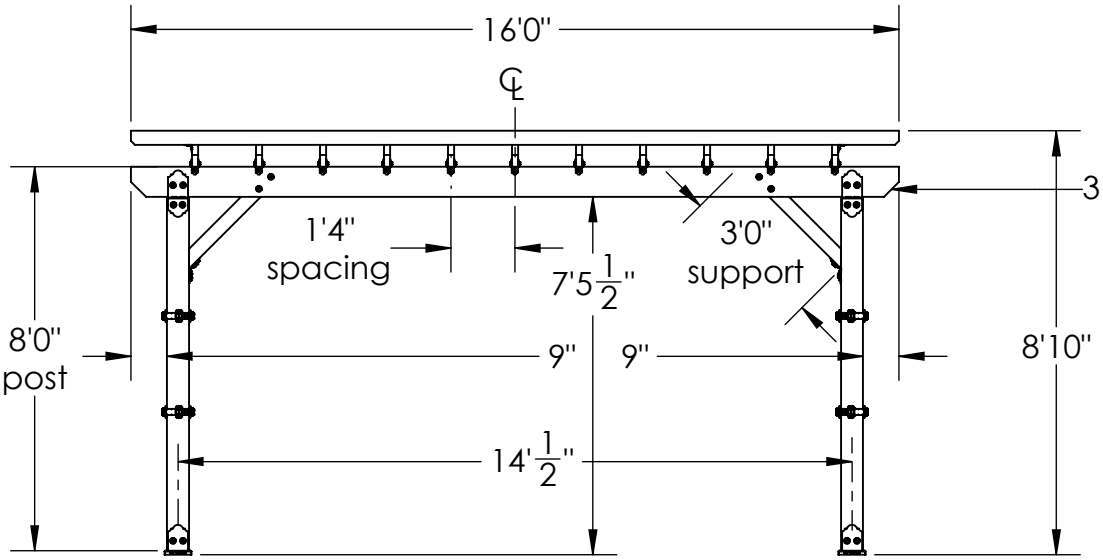

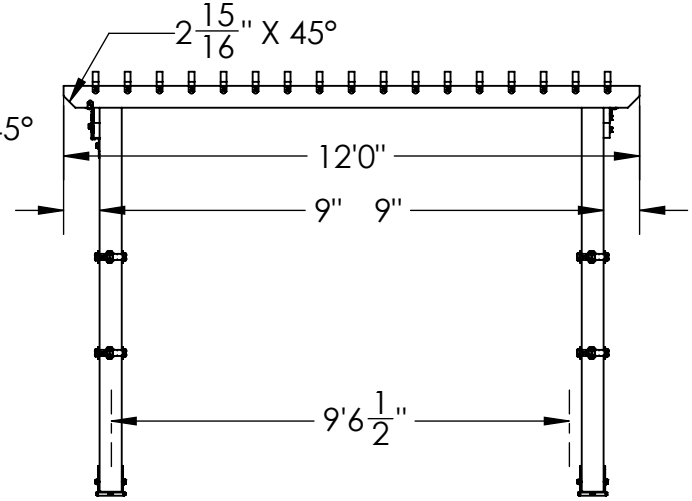

Overview

OZCO Project #324 - 12x16 Column Cap Pergola with Lite Products

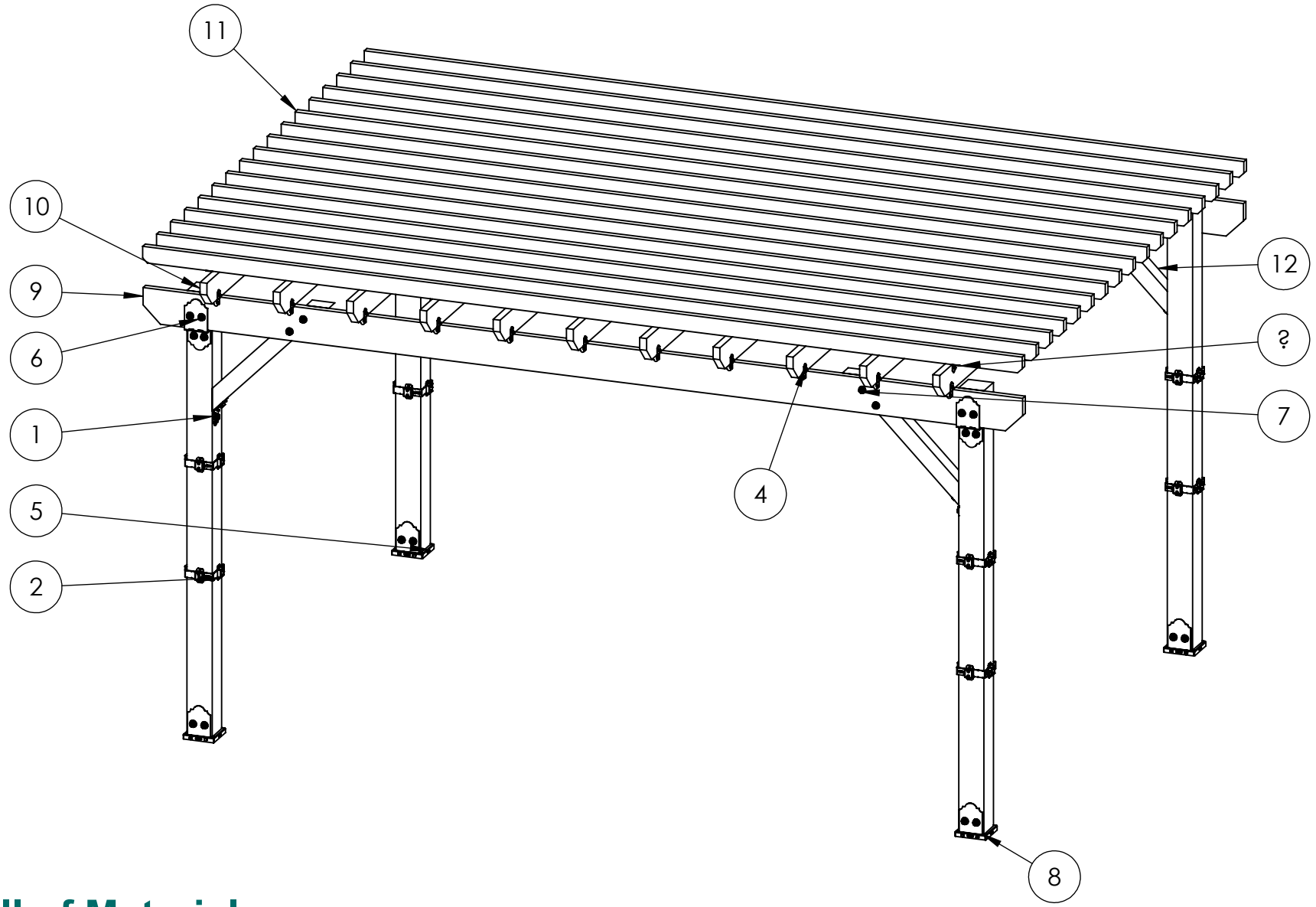

Bill of Material

OZCO Project #324 - 12x16 Column Cap Pergola with Lite Products

ITEM NO.	QTY.	PART NUMBER	DESCRIPTION
1	1	56668	4" Flush Inside 45 (FI45-LS-4)
2	8	51786	6x6 Post Band (6X6-BND-IW)
3	4	56617	2" Standard Rafter Clip (RC-LS-2)
4	3	56638	2" High Velocity Rafter Clip (RC-LS-HV-2)
5	4	54208	Lite 6X6 Post Base (6X6-PB-LSL)
6	1	54210	Lite 8" Post 2 Beam (8- P2B-LSL)
7	1	56627	Screw, OWT 3-3/4" (95mm) Timber with HCN
8	4	6x6 Post	6x6x8'0"
9	2	2x8 Board	2x8x16'0"
10	11	2x6 Board	2x6x12'0"
11	17	2x4 Board	2x4x16'0"
12	4	4x4 Support	4x4x3'0"

Bill of Material

OZCO Project #324 - 12x16 Column Cap Pergola with Lite Products

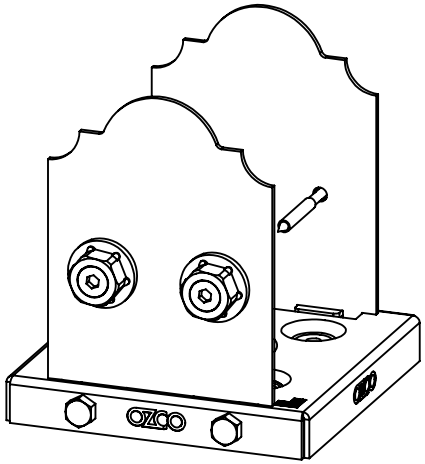

54208

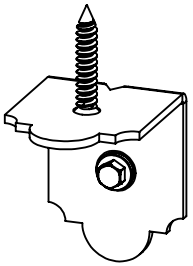

56617

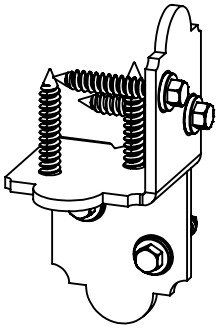

56638

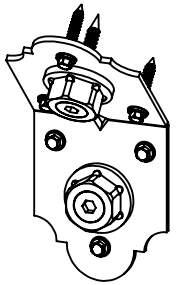

56668

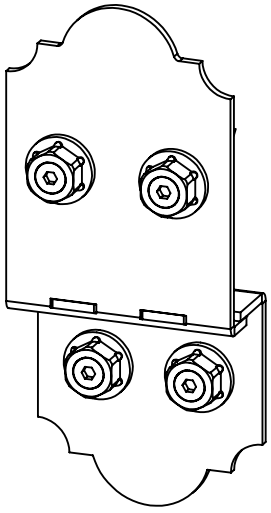

54210

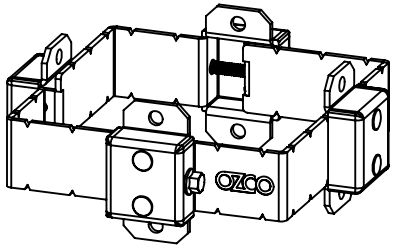

51786

follow QR barcode with your smart phone or visit OZCOBP.com for product installation instructions

Laredo Sunset & Ironwood

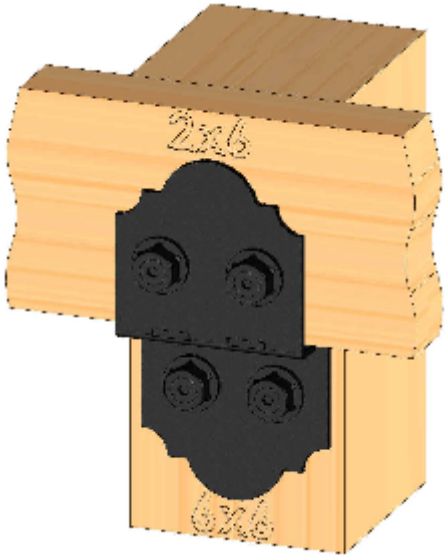

Laredo Sunset
(566XX series)

2 great styles

Same functionality

choose your
connection lifestyle

both styles available for
most products

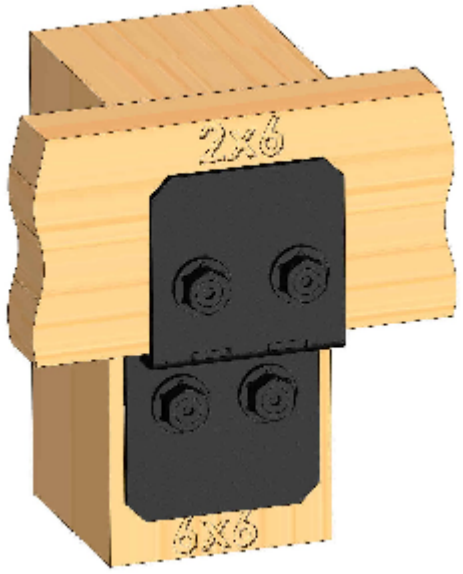

Ironwood
(517XX series)

OWT Ornamental Wood Ties

OZCO BUILDING PRODUCTS

V2.00 - Installation Instructions, Specifications and Project Plans are effective 11/11/2017 . This information is updated periodically and should not be relied upon after 2 years from 11/11/2017 . Please visit OZCOBP.com to get current information.

Translucent

OZCO Project #324 - 12x16 Column Cap
Pergola with Lite Products